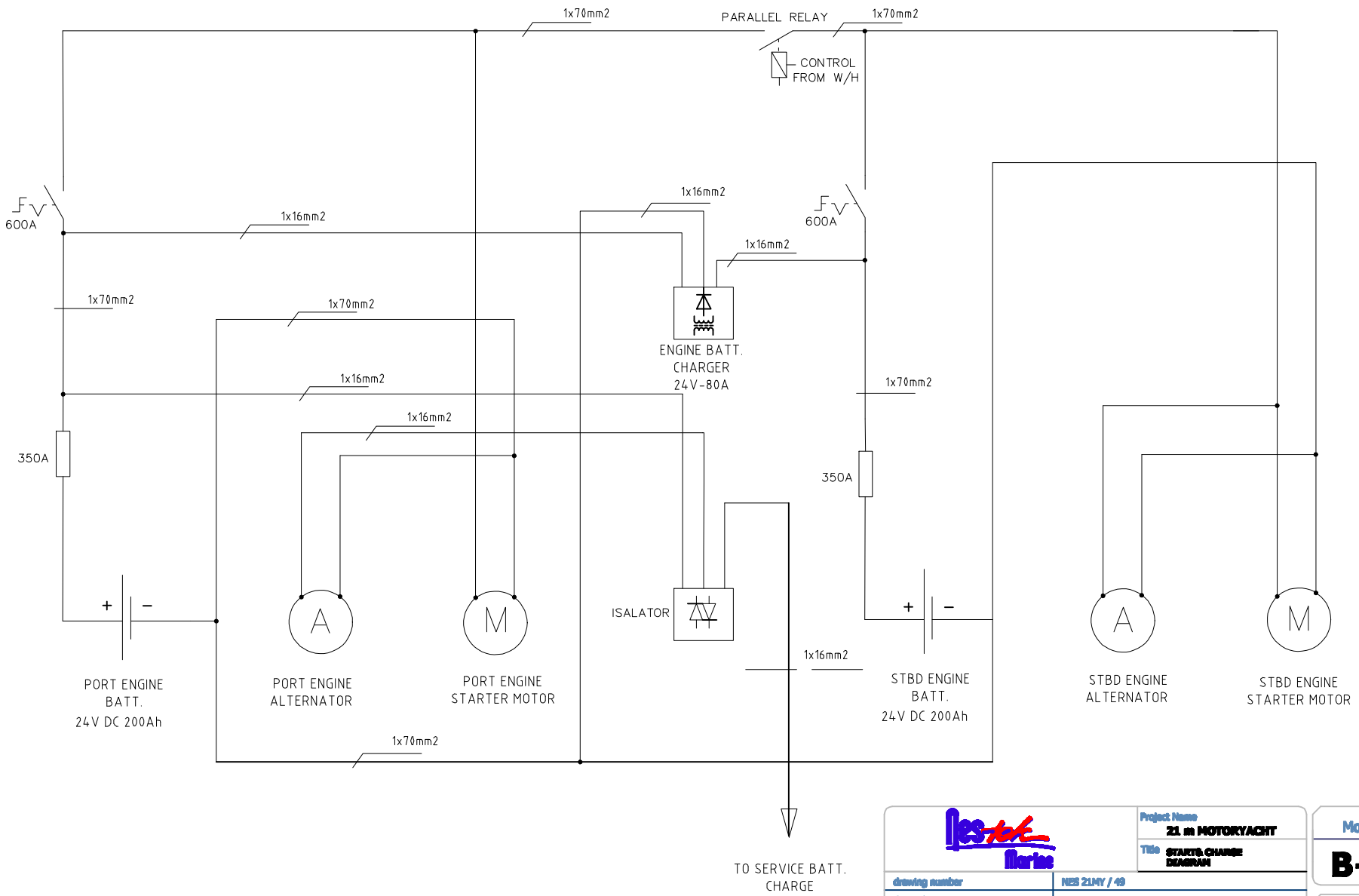

Project Name: 21 m MOTORYACHT		Module: B+C
Title: START& CHARGE DIAGRAM		
drawing number	NES 21MY / 49	
drawn by	Ayşe TABAK, Electrical/Electronical Eng.	Design Category: B
checked by		
scale		
date	24.04.2008	

NOTE: All feeder cables shall be according to IEC 60092-353 GYY